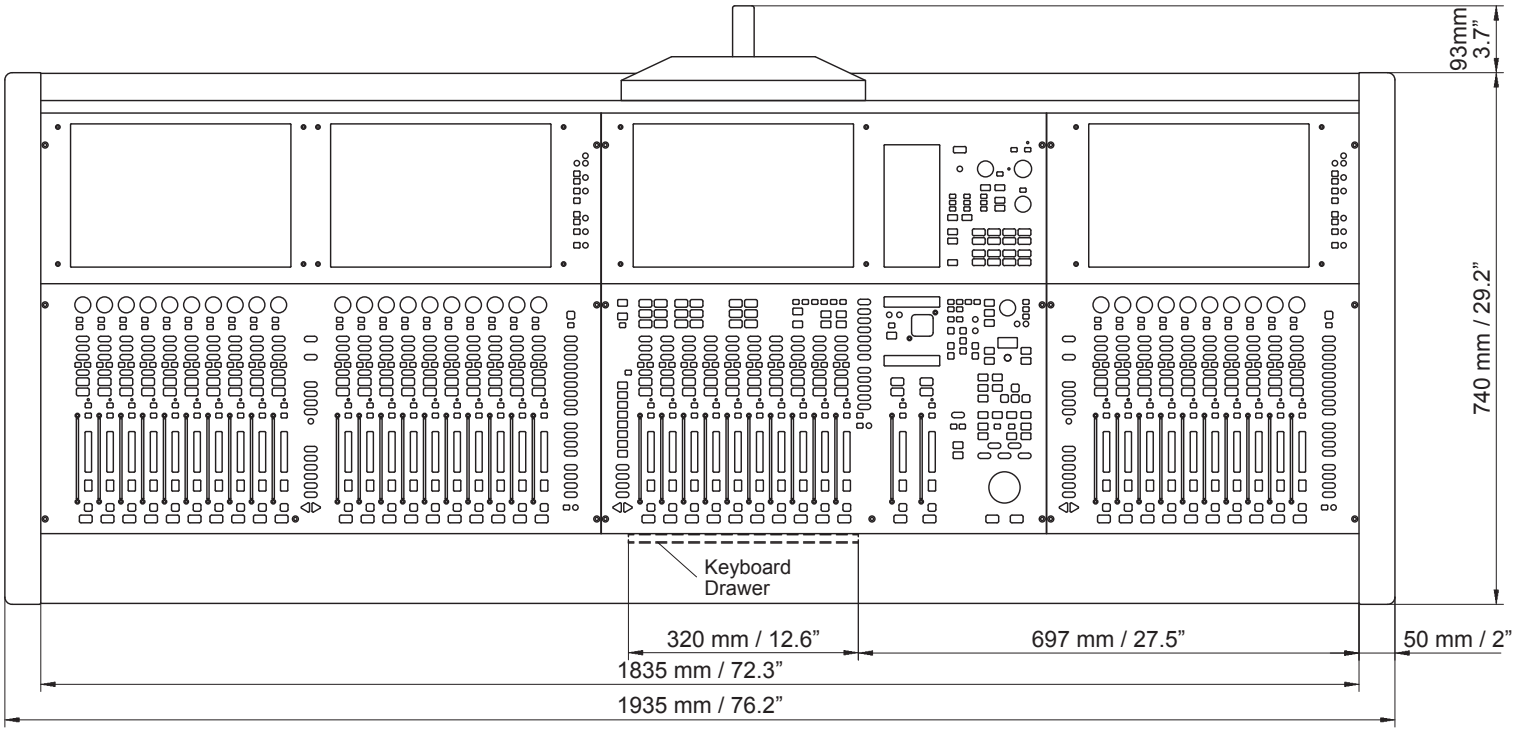

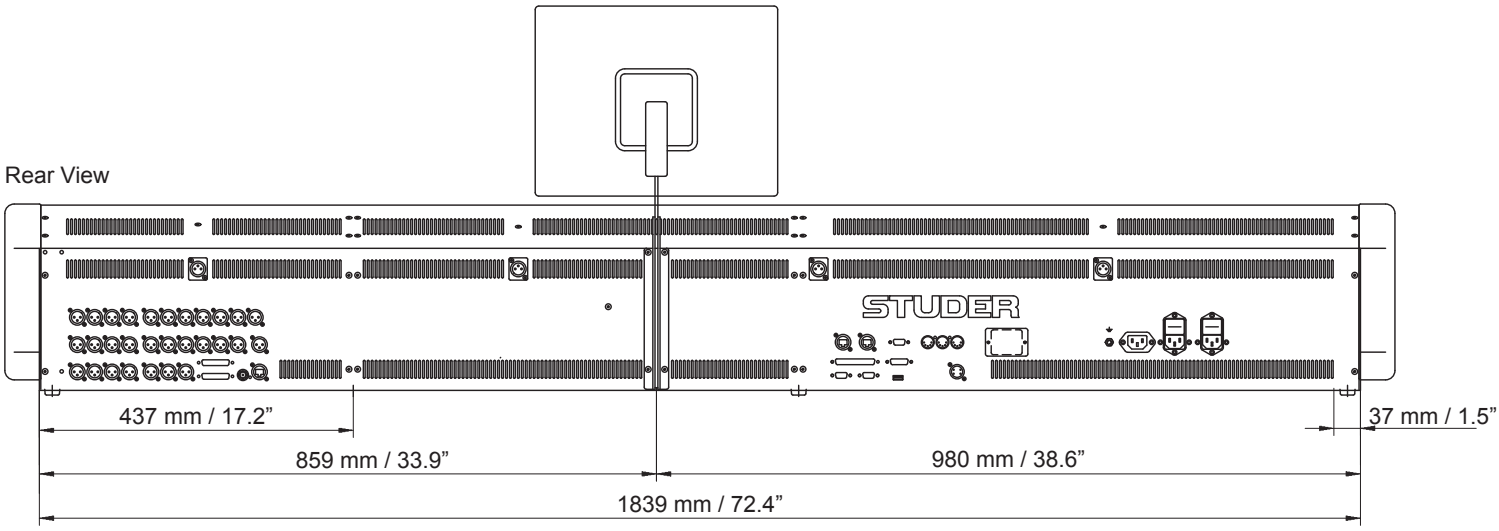

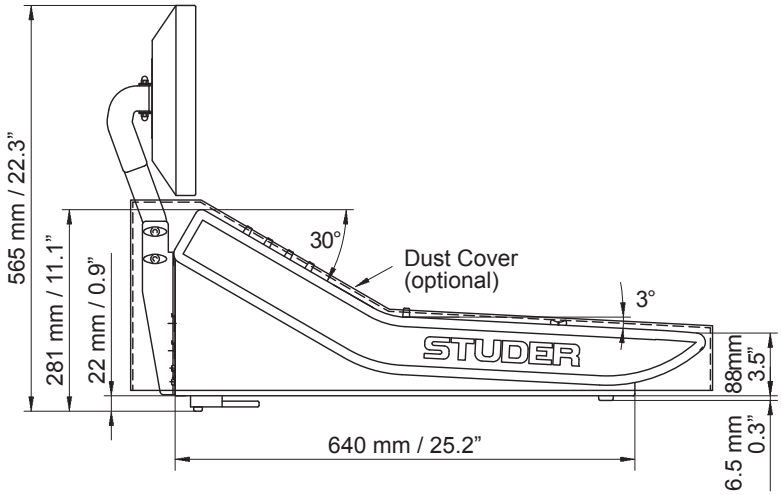

Studer Vista 5 Dimensions